Unit:mm

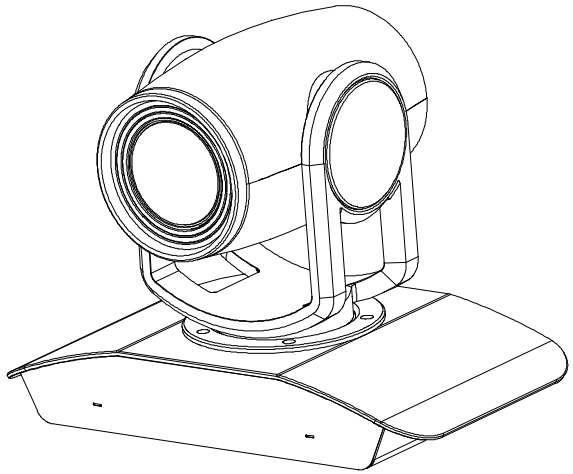

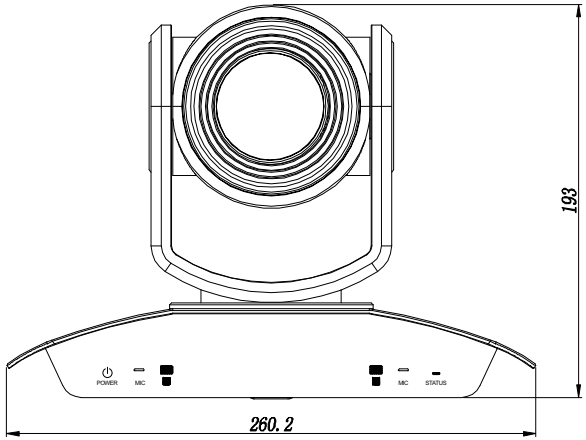
193
260.2
POWER
MIC
MIC
STATUS

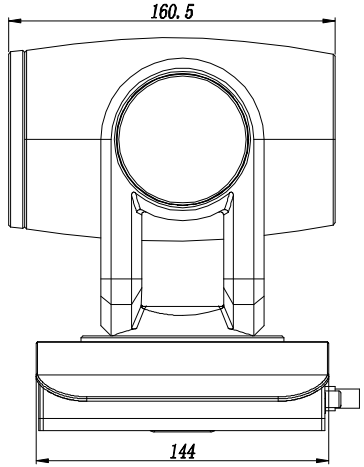
160.5
144

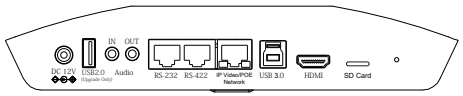
DC 12V
USB2.0
(Upgrade Only)
IN
OUT
Audio
RS-232
RS-422
IP Video/POE
Network
USB 3.0
HDMI
SD Card

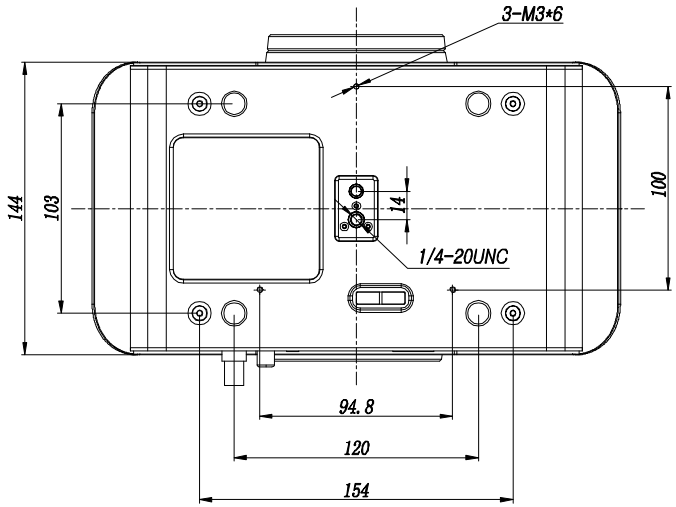
3-M3*6
144
103
14
100
1/4-20UNC
94.8
120
154

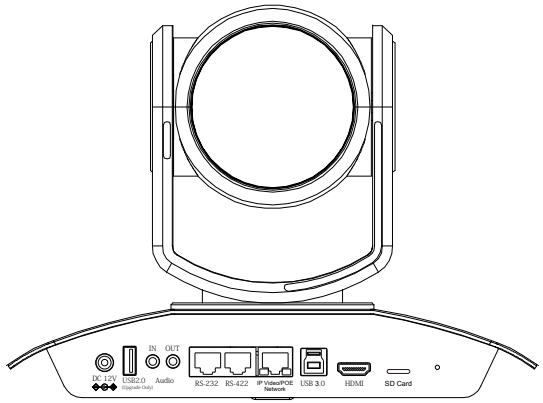
DC 12V
USB2.0
(Upgrade Only)
IN
OUT
Audio
RS-232
RS-422
IP Video/POE
Network
USB 3.0
HDMI
SD Card